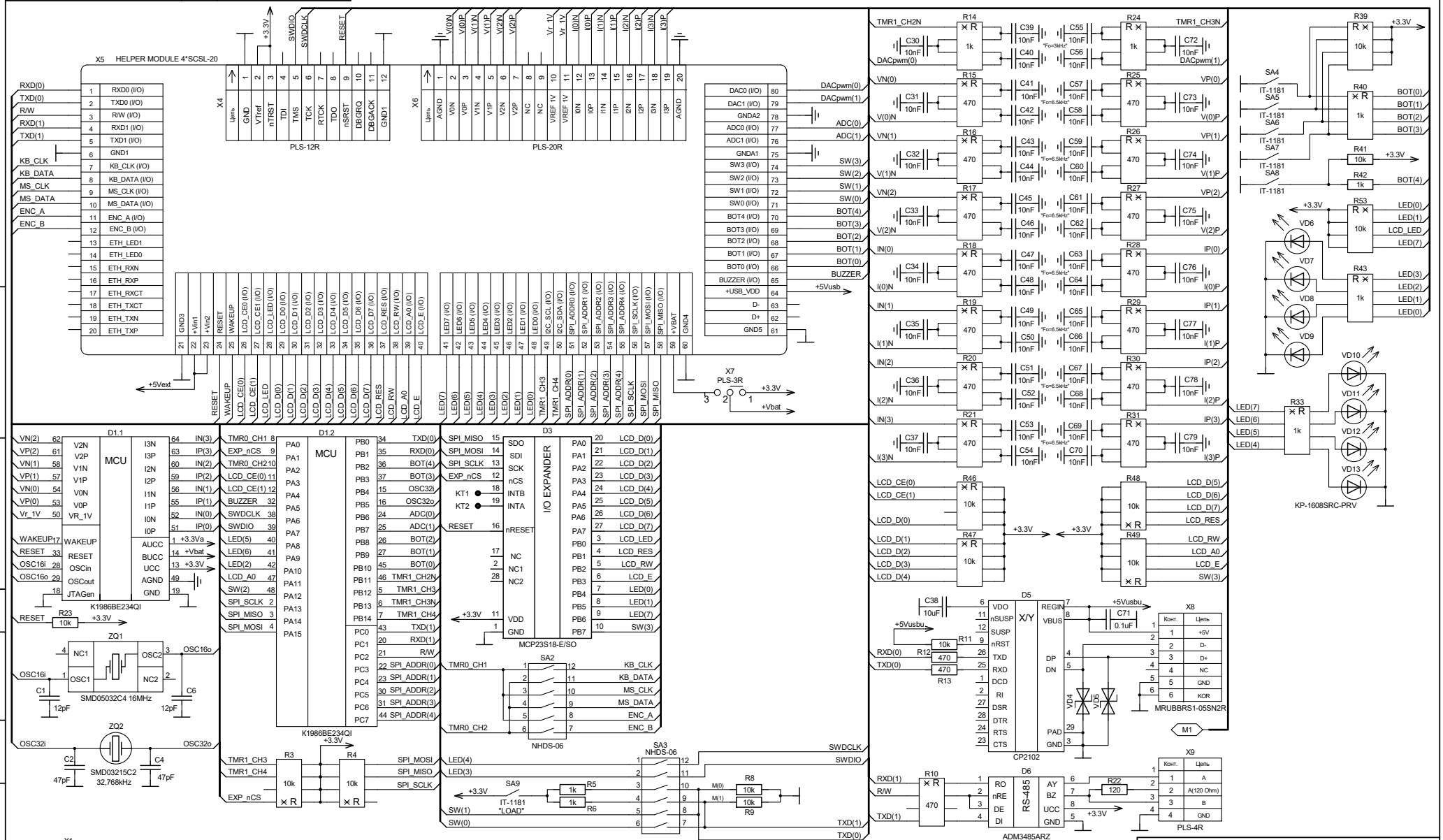
LDM-HELPER-K1986BE234QI ver.2.02
X5 HELPER MODULE 4*SCSL-20
X4
PLS-12R
X6
PLS-20R
D1.1
MCU
K1986BE234QI
D1.2
K1986BE234QI
D3
I/O EXPANDER
MCP23S18-E/SO
SA2
NHDS-06
SA3
NHDS-06
ZQ1
SMD05032C4 16MHz
ZQ2
SMD03215C2 32,768kHz
X7
PLS-3R
D5
X/Y
CP2102
X8
MRUBBRS1-05SN2R
D6
RS-485
ADM3485ARZ
X9
PLS-4R
KP-1608SRC-PRV
X1 PLS-2
SA1 "PWROFF"
D2
LDO
ADP3334ARZ
SA9 IT-1181 "LOAD"
SA3(3:10 and 4:9) - Boot Mode Select on Module
SA3(5:8 and 6:7) - Boot Mode Select on Main Board
Boot Mode Select:
"M(1..0) = 10 or 01 - USB/UART Load"
"M(1..0) = 00 - SWD"
LDM-HELPER-K1986BE234QI ver.2.02
Master Module K1986BE234QI
LDM-SYSTEMS
Перв. примен.
Справ. №
Подп. и дата
Инв. №дубл.
Взам. инв.№
Подп. и дата
Инв. №подл.
Копировал
Формат А2